MURR ELEKTRONIK
stay connected

SIEMENS CONTACTOR SUPPRESSOR

Varistor and LED, 230VAC/DC

230 V AC/DC
VDR + LED

Link to Product

Illustration

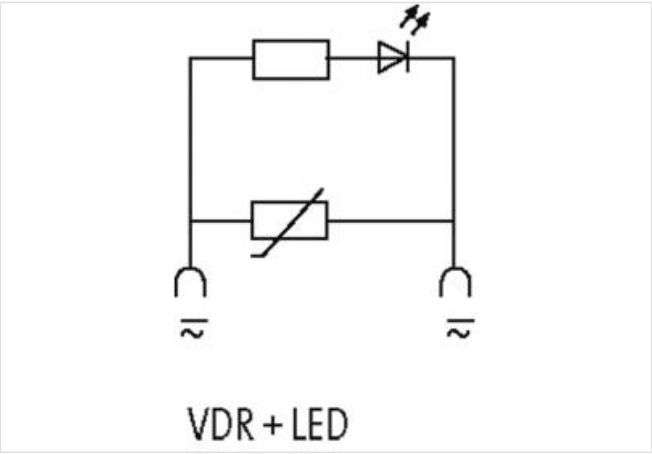

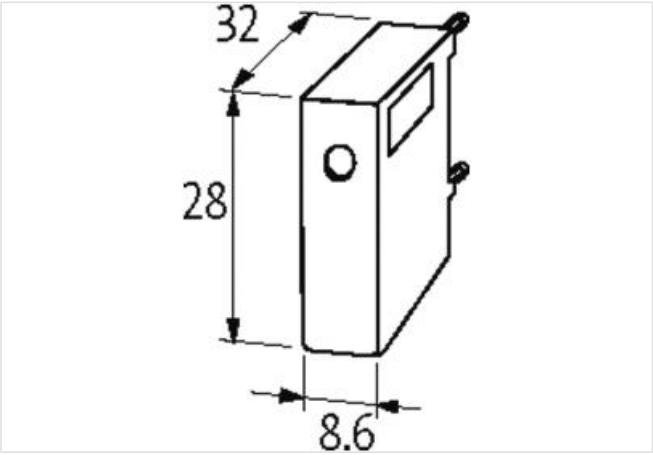

Product may differ from Image

Commercial data

ECLASS-6.0	27371013
ECLASS-6.1	27371013
ECLASS-7.0	27371013
ECLASS-8.0	27371013
ECLASS-9.0	27371013
ECLASS-10.1	27371013
ECLASS-11.1	27371013
ECLASS-12.0	27371013

The information in this Product-PDF has been compiled with the utmost care.
Liability for the correctness completeness and topicality of the information is restricted to gross negligence. Version: 2024-04-25

ETIM-5.0	EC002498
customs tariff number	85363010
GTIN	4048879017565
Packaging unit	1
Compatibility | Compatible with	
Appropriate contactors	3 RH 1/11; 3 RT 1/3 RH1; 3 RT 1/10.15...10.17
Electrical data | Input	
Input voltage AC min.	110 V
Input voltage AC max.	253 V
Input voltage DC min.	110 V
Input voltage DC max.	253 V
Mechanical data | Mounting data	
Height	28 mm
Width	8,6 mm
Depth	32 mm

The information in this Product-PDF has been compiled with the utmost care.
Liability for the correctness completeness and topicality of the information is restricted to gross negligence. Version: 2024-04-25