MURR ELEKTRONIK
stay connected

MVK-ME DIO8 (DIO8)

EthernetIP Compact module, metal

Digital inputs/outputs
DIO8 DIO8
Ethernet 10/100 Mbit/s; M12, D-coded
7/8", 5-pole, 2× max. 9 A
M12, 5-pole, A-coded
Connection cables are in the online shop under "Connection Technology".
Housing fully potted.
mounting compatible with I/O modules of the MVK series

Link to Product

Illustration

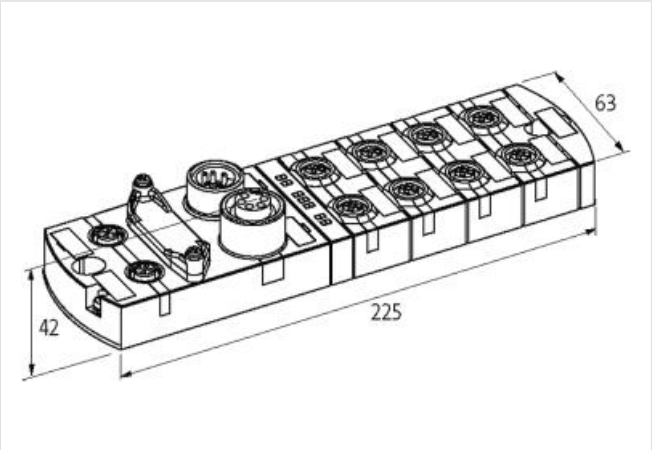

Product may differ from Image

Commercial data

ECLASS-6.0	27242604
ECLASS-6.1	27242604
ECLASS-7.0	27242604
ECLASS-8.0	27242604
ECLASS-9.0	27242604
ECLASS-10.1	27242604
ECLASS-11.1	27242604
ECLASS-12.0	27242604
ETIM-5.0	EC001599
customs tariff number	85389099
GTIN	4048879445481
Packaging unit	1

Electrical data | Supply

Norm operating voltage	EN 61131-2
Operating voltage US DC	24 V
Operating voltage UA DC	24 V
Total current UA max.	9 A

The information in this Product-PDF has been compiled with the utmost care.
Liability for the correctness completeness and topicality of the information is restricted to gross negligence. Version: 2024-04-24

Total current US max.	9 A
Electrical data | Input	
Overload resistant	yes
Short-circuit protected	yes
Type input	PNP, for 3-wire sensors or mechanical switches
Sensor current US per input max.	0,2 A
Electrical data | Output	
Overload resistant	yes
Short-circuit protected	yes
Output current per pin max.	1,6 A
Lamp load	10 W
Industrial communication | Ethernet/IP	
DLR (Device Level Ring)	yes
EtherNet/IP addressing	BOOTP, DHCP, Rotary switch
Diagnostics	
Diagnostic	No voltage, Under voltage
Diagnostic via BUS	per module and channel
Diagnostic via LED	per module and channel
Short circuit diagnosis	yes
LED display	Ethernet connection/data traffic
Overload diagnosis	yes
Device protection | Electrical	
Degree of protection (EN IEC 60529)	IP67
Mechanical data | Mounting data	
Suitable for mounting type	2-hole screw mounting
Height	42 mm
Width	63 mm
Depth	225 mm
Environmental characteristics | Climatic	
Operating temperature min.	-25 °C
Operating temperature max.	55 °C
Storage temperature min.	-25 °C
Storage temperature max.	70 °C
Connection type 4	
Connection type 1	X0-X7
Connection type 2	XD1
Connection type 3	XD2
Connection type 4	XF2
Family construction form	M12
Gender	female
Color contact carrier	black
Coding	A
No. of poles	5
PIN 1	24 V DC (US)
PIN 2	DI / DO / Diag
PIN 3	0 V (US)
PIN 4	DI / DO
PIN 5	PE
Family construction form	7/8"
Gender	male
Color contact carrier	black

The information in this Product-PDF has been compiled with the utmost care.
Liability for the correctness completeness and topicality of the information is restricted to gross negligence. Version: 2024-04-24

No. of poles	5
PIN 1	0 V (UA)
PIN 2	0 V (US)
PIN 3	PE
PIN 4	24 V DC (US)
PIN 5	24 V DC (UA)
Family construction form	7/8"
Gender	female
Color contact carrier	black
No. of poles	5
PIN 1	0 V (UA)
PIN 2	0 V (US)
PIN 3	PE
PIN 4	24 V DC (US)
PIN 5	24 V DC (UA)
Mounting method	inserted, screwed
Tightening torque	0,6 Nm
Family construction form	M12
Gender	female
Color contact carrier	black
Coding	D
No. of poles	4
PIN 1	TD +
PIN 2	RD +
PIN 3	TD -
PIN 4	RD -

The information in this Product-PDF has been compiled with the utmost care.
Liability for the correctness completeness and topicality of the information is restricted to gross negligence. Version: 2024-04-24