MURR ELEKTRONIK
stay connected

MET 1-PHASE CONTROL AND ISOLATION TRANSFORMER

P: 2000VA IN: 400VAC+/- 5% OUT: 230VAC

Single-phase - Control and Isolation Transformers
2000 VA
Isolation class T 40/B

Link to Product

Illustration

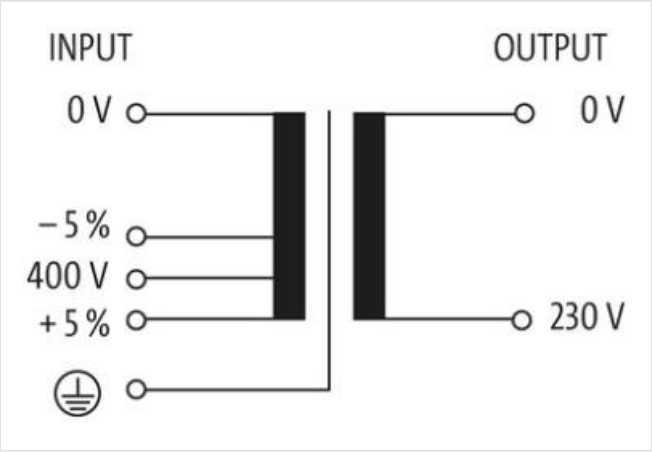

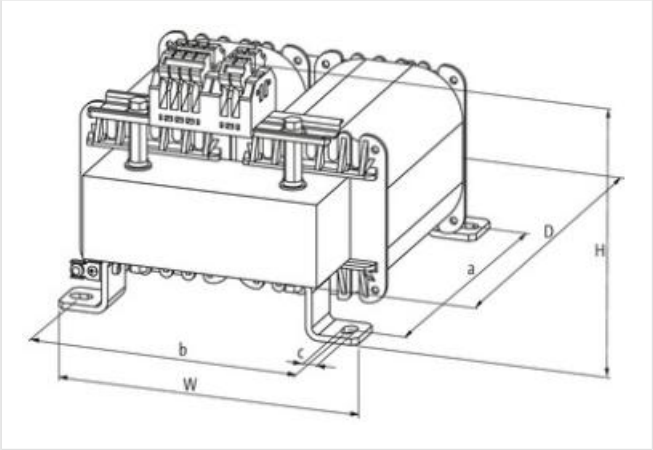

Product may differ from Image

Commercial data

ECLASS-6.0	27031302
ECLASS-6.1	27031302
ECLASS-7.0	27031302
ECLASS-8.0	27031302
ECLASS-9.0	27031302
ECLASS-10.1	27031302

The information in this Product-PDF has been compiled with the utmost care.
Liability for the correctness completeness and topicality of the information is restricted to gross negligence. Version: 2024-04-26

ECLASS-11.1	27031302
ECLASS-12.0	27031302
ETIM-5.0	EC002486
customs tariff number	85043200
GTIN	4048879078825
Packaging unit	1
Electrical data | Supply	
Power frequency	50 ... 60 Hz
Electrical data | Input	
Input voltage AC	400 V
Input voltage AC min.	380 V
Input voltage AC max.	420 V
Current input AC	5,1 A
Max. inrush current	76 A
Short-circuit current	182 A
Electrical data | Output	
Output voltage AC	230 V
Output voltage adjustable	no
Power rating AC max.	2000 VA
Device protection | Electrical	
Insulation test voltage input - output	4 kV
Mechanical data | Mounting data	
Suitable for mounting type	Long-hole mounting
Mounting dimension a	200 mm
Mounting dimension b	174 mm
Mounting dimension c	9 mm
Height	170 mm
Width	195 mm
Depth	250 mm
Diameter bore	9 mm
Length bore	14 mm
Environmental characteristics | Climatic	
Operating temperature min.	-20 °C
Operating temperature max.	40 °C
Storage temperature min.	-40 °C
Storage temperature max.	80 °C
Conformity	
Product standard	EN 61558-1, EN 61558-2-4, EN 62041 category 0

The information in this Product-PDF has been compiled with the utmost care.
Liability for the correctness completeness and topicality of the information is restricted to gross negligence. Version: 2024-04-26