MURR ELEKTRONIK
stay connected

MSUD valve plug A-18mm with cable

PUR 3x0.75 gy UL/CSA+drag ch. 0.5m

MSUD
Form A (18 mm)
24 V AC ±20% / DC ±25%
LED and suppression
Bridged PE
Further cable lengths on request.
Plastic housings with good resistance against chemicals and oils.
The resistance to aggressive media should be individually tested for your application. Further details on request.

Link to Product

Illustration

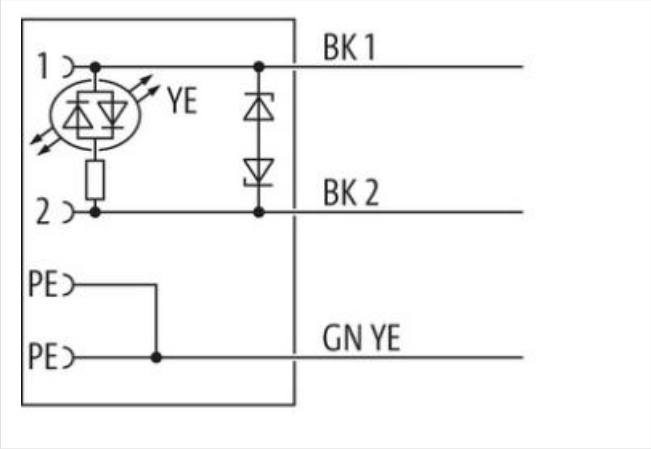

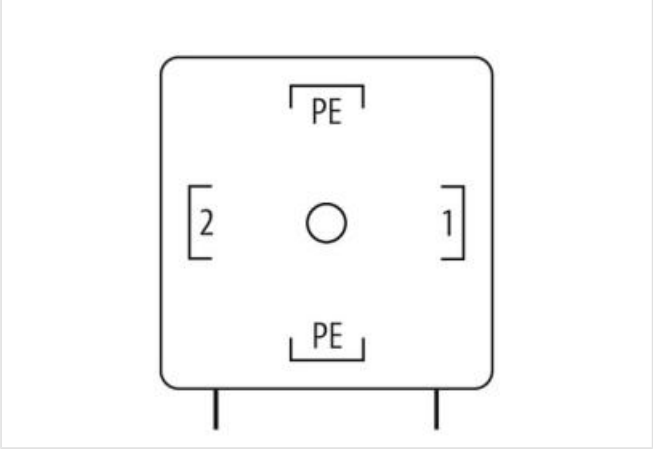

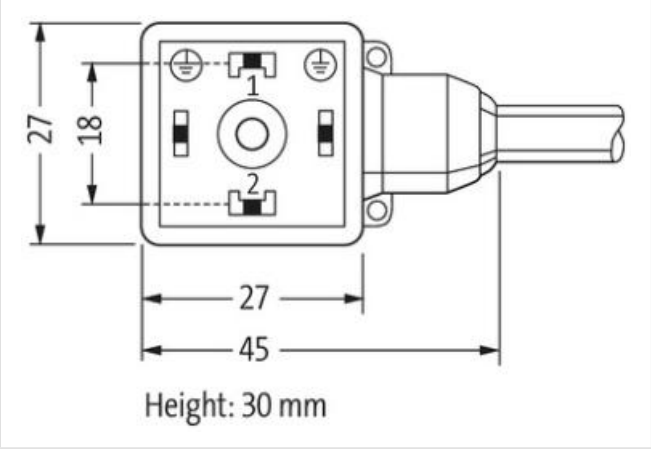

Product may differ from Image

Cable length	0,5 m

Side 1

The information in this Product-PDF has been compiled with the utmost care.
Liability for the correctness completeness and topicality of the information is restricted to gross negligence. Version: 2024-06-01

Tightening torque	0,4 Nm
Mounting method	inserted, screwed
Family construction form	MSUD A
Thread	M3
Material	PBT
Degree of protection (EN IEC 60529)	IP67
Commercial data	
ECLASS-6.0	27279218
ECLASS-7.0	27279218
ECLASS-8.0	27279218
ECLASS-9.0	27060311
ECLASS-10.1	27060312
ECLASS-11.1	27060312
ECLASS-12.0	27060312
ETIM-5.0	EC001855
customs tariff number	85444290
GTIN	4048879538961
Packaging unit	1
Electrical data	
Drop-out delay time max.	20 ms
Electrical data | Supply	
Operating voltage AC	24 V
Operating voltage AC min.	19,2 V
Operating voltage AC max.	28,8 V
Operating voltage DC	24 V
Operating voltage DC min.	18 V
Operating voltage DC max.	30 V
Cut-off peak voltage max.	55 V
Current operating per contact max.	4 A
Current consumption max.	15 mA
Diagnostics	
Status indication LED	yellow
Installation | Connection	
Mounting set	M3
Device protection | Electrical	
Additional condition protection degree	inserted, screwed
Pollution Degree	3
Rated surge voltage	0,8 kV
Material group (IEC 60664-1)	I
Additional suppressor	Diode, Z-Diode
Mechanical data | Material data	
Coating locking	verzinkt
Coating of fitting	verzinkt
Color housing	black
Material gasket	PUR
Locking material	Steel
Material screw connection	Steel
Mechanical data | Mounting data	
Mounting method	inserted, screwed
Environmental characteristics | Climatic	

The information in this Product-PDF has been compiled with the utmost care.
Liability for the correctness completeness and topicality of the information is restricted to gross negligence. Version: 2024-06-01

Operating temperature min.	-25 °C
Operating temperature max.	85 °C
Additional condition temperature range	depending on cable quality
Important installation notes	
Note on strain relief	Protect the connectors by suitable measures from mechanical loads, e.g. by the usage of cable ties.
Note on bending radius	**Attention:** Observe the permissible bending radii when laying cables, as the IP protection class can be endangered by excessive bending forces.
Installation | Cable	
wire arrangement	black 1, black 2, green-yellow
Cable identification	236
Cable Type	3
Printing color of wire insulation	white (isolation black)
Jacket Color	gray
Type of Certificate	cURus
Amount stranding	1
Stranding	3 wires twisted
wire arrangement	black 1, black 2, green-yellow
Cable weigth	56,1 g/m
Material jacket	PUR
Shore hardness jacket	90 ± 5 Shore A
Freedom from ingredients (jacket)	lead-free, cadmium-free, CFC-free, halogen-free, silicone-free
Outer-diameter (jacket)	5,9 mm
Tolerance outer diameter (sheath)	± 5 %
Material wire insulation	PP
Amount wires	3
Outer diameter insulation	1,85 mm
Outer diameter tolerance core insulation	± 5 %
Shore hardness wire insulation	70 ± 5 Shore D
Ingredient freeness wire insulation	lead-free, cadmium-free, CFC-free, halogen-free, silicone-free
Printing color of wire insulation	white (isolation black)
Amount strands (wire)	42
Diameter of single wires	0,15 mm
Conductor crosssection (wire)	0,75 mm²
Material conductor wire	Stranded copper wire, bare
Conductor type (wire)	strand class 6
Nominal voltage AC max.	300 V
Current load capacity (standard)	to DIN VDE 0298-4
Current load capacity min. wire	12 A
Electrical resistance line constant wire	26 Ω/km @ 20 °C
AC withstand voltage (wire - wire)	2,5 kV @ 60 s
Power frequency withstand voltage (wire - jacket)	2,5 kV @ 60 s
Min. operating temperature (static)	-40 °C
Max. operating temperature (fixed)	80 °C / 90 °C @ 10000 h Operation
Operating temperature min. (dynamic)	-25 °C
Operating temperature max. (dynamic)	80 °C / 90 °C @ 10000 h Operation
Flame resistance	UL 1581 § 1090 | IEC 60332-2-2 | UL 1581 § 1100 FT2
chemical resistance	Good, application-related testing
Gasoline resistance	Good, application-related testing
Oil resistance	DIN EN 60811-404 | Good, application-related testing
Bending radius (fixed)	5 x Outer diameter
Bending radius (dynamic)	10 x Outer diameter
No. of bending cycles (C-track)	10 Mio. @ 25 °C
Traversing distance (C-track)	10 m @ 25 °C | horizontal

The information in this Product-PDF has been compiled with the utmost care.
Liability for the correctness completeness and topicality of the information is restricted to gross negligence. Version: 2024-06-01

Travel speed (C-track)	3 m/s @ 25 °C
No. of torsion cycles	2 Mio.
Torsion stress	± 180 °/m
Torsion speed	35 cycles/min

The information in this Product-PDF has been compiled with the utmost care.
Liability for the correctness completeness and topicality of the information is restricted to gross negligence. Version: 2024-06-01