MURR ELEKTRONIK
stay connected

M8 male 90° 180°/ M8 male 90° A-cod. 180° shielded

PUR 1x4xAWG26 shielded gn UL/CSA+drag ch. 30m

Ethernet CAT5
Male 90° – male 90°
M8 – M8, 4-pole
shielded
Attention: Contact carrier turned to 180°!
Further cable lengths on request.
Plastic housings with good resistance against chemicals and oils.
The resistance to aggressive media should be individually tested for your application. Further details on request.

Link to Product

Illustration

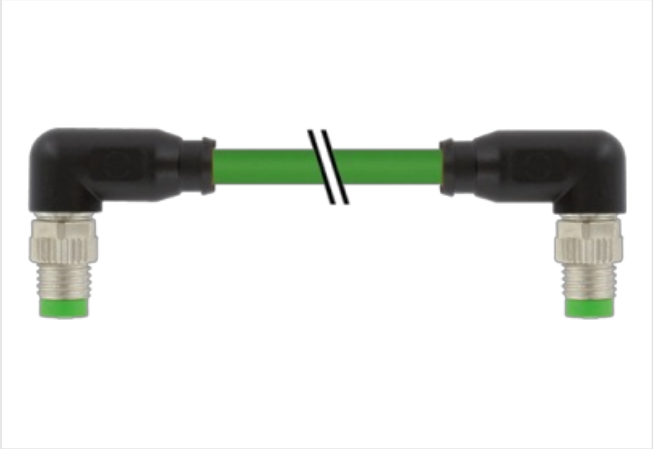

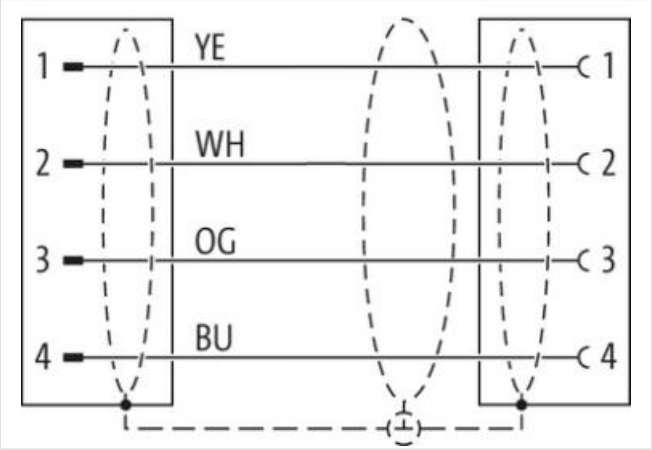

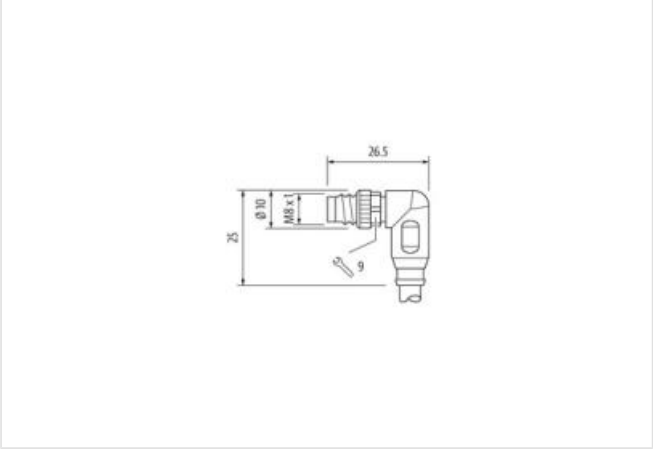

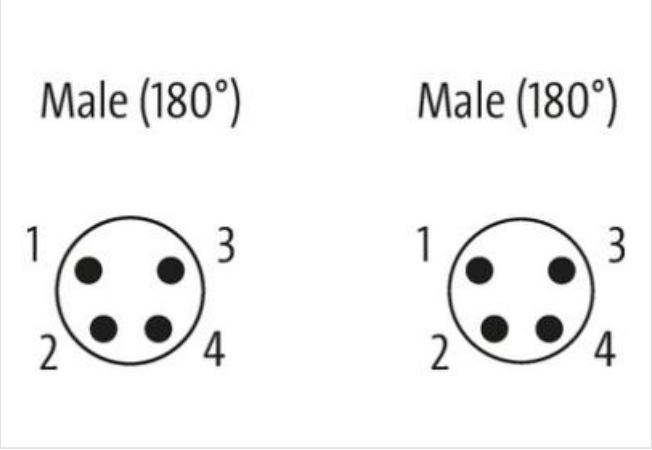

Product may differ from Image

Cable length	30 m

Side 1

Tightening torque	0,4 Nm
Family construction form	M8
Thread	M8 x 1
suitable for corrugated tube (internal Ø)	6,5 mm
Width across flats	SW9
Degree of protection (EN IEC 60529)	IP67
Side 2	
Thread	M8 x 1
Commercial data	
ECLASS-6.0	27061801
ECLASS-6.1	27060307
ECLASS-7.0	27060307
ECLASS-8.0	27060307
ECLASS-9.0	27060307
ECLASS-10.1	27060307
ECLASS-11.1	27060307
ECLASS-12.0	27060307
ETIM-5.0	EC002599
customs tariff number	85444290
GTIN	4048879611251
Packaging unit	1
Electrical data | Supply	
Operating voltage AC max.	30 V
Operating voltage DC max.	30 V
Current operating per contact max.	4 A
Industrial communication	
Transfer parameters	With reference to CAT5, Class D (ISO/IEC 11801)
Data transmission rate max.	100 MBit/s
Industrial communication | Ethernet functionality	
duplex	Full duplex
Device protection | Electrical	
Degree of protection (ISO 20653:2013)	IP66K
Additional condition protection degree	inserted, screwed
Pollution Degree	3
Rated surge voltage	0,8 kV
Material group (IEC 60664-1)	I
Mechanical data | Material data	
Coating locking	Nickeled
Material housing	PUR
Locking material	Zinc die-casting
Mechanical data | Mounting data	
Mounting method	inserted, screwed, Shaking protection
Environmental characteristics | Climatic	
Operating temperature min.	-25 °C
Operating temperature max.	85 °C
Additional condition temperature range	depending on cable quality
Important installation notes	
Note on strain relief	Protect the connectors by suitable measures from mechanical loads, e.g. by the usage of cable ties.
Note on bending radius	**Attention:** Observe the permissible bending radii when laying cables, as the IP protection class can be endangered by excessive bending forces.

MURR ELEKTRONIK
stay connected

Installation | Cable	
Cable identification	791
Jacket Color	green
Type of Certificate	cURus
Amount stranding	1
Stranding	4 wires star-shaped twisted
Cable shielding (type)	copper braid, tinned
Cable shielding (coverage)	85 %
Banding	Fiber tape, Fleece, Foil
Filler	yes
wire arrangement	white, orange, blue, yellow
Traversing distance (C-track)	5 m
Cable weigth	59,4 g/m
Material jacket	PUR
Freedom from ingredients (jacket)	lead-free, CFC-free, halogen-free
Outer-diameter (jacket)	4,9 mm
Tolerance outer diameter (sheath)	± 5 %
Material wire insulation	PP
Amount wires	4
Outer diameter insulation	1,04 mm
Outer diameter tolerance core insulation	± 5 %
Ingredient freeness wire insulation	lead-free, CFC-free, halogen-free
Amount strands (wire)	19
Diameter of single wires	26 AWG
Conductor crosssection (wire)	26 AWG
Material conductor wire	copper stranded wire, tinned
Nominal voltage AC max.	300 V
Current load capacity (standard)	to DIN VDE 0298-4
Current load capacity min. wire	2,4 A
Characteristic impedance	100 Ω ± 15 % @ 100 MHz
Electrical resistance line constant wire	140 Ω/km
AC withstand voltage (wire - wire)	0,7 kV @ 60 s
Electric capacitance	51000 pF/km
Power frequency withstand voltage (wire - jacket)	0,7 kV @ 60 s
AC withstand voltage (wire - shield)	0,7 kV @ 60 s
Min. operating temperature (static)	-40 °C
Max. operating temperature (fixed)	80 °C
Operating temperature min. (dynamic)	-30 °C
Operating temperature max. (dynamic)	70 °C
Flame resistance	IEC 60332-2-2 | UL 1581 § 1100 FT2 | UL 1581 § 1090
chemical resistance	Good, application-related testing
Gasoline resistance	Good, application-related testing
Oil resistance	DIN EN 60811-404 | Good, application-related testing
Bending radius (fixed)	7,5 x Outer diameter
Bending radius (dynamic)	12,5 x Outer diameter