MURR ELEKTRONIK
stay connected

SUPPRESSOR FOR CONTACTORS

Varistor, 24…48 VAC/DC, 146 VA/W

24 V AC/DC
VDR
For other configurations and voltages, please inquire.

Link til artikel

Billede

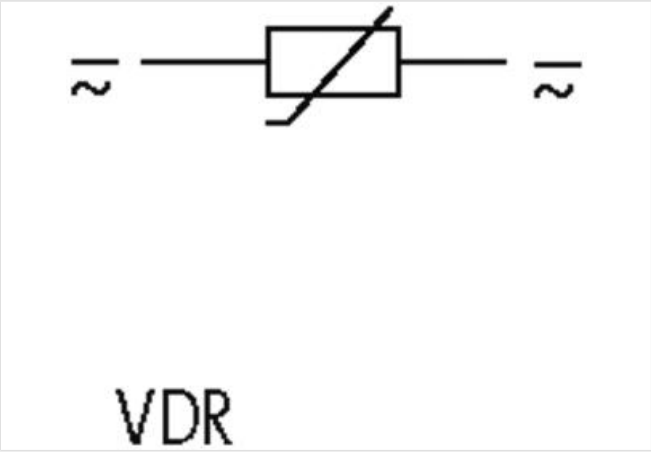

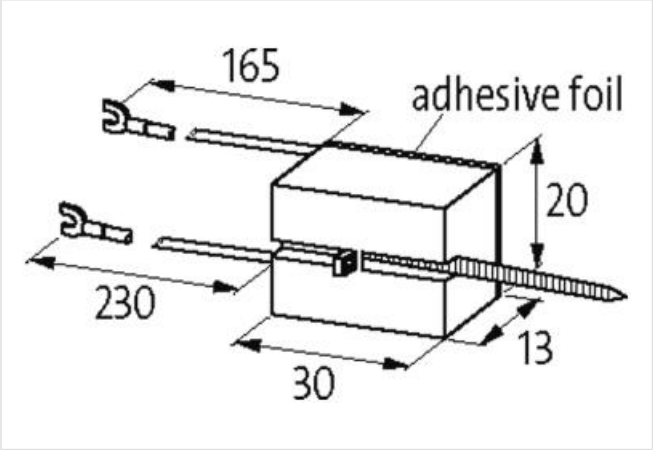

Produktet kan afvige fra billedet

Commercial data

ECLASS-6.0	27371013
ECLASS-6.1	27371013
ECLASS-7.0	27371013
ECLASS-8.0	27371013
ECLASS-9.0	27371013
ECLASS-10.1	27371013

Oplysningerne i dette datablad er udarbejdet med størst mulig omhu.
Liability for the correctness completeness and topicality of the information is restricted to gross negligence. Version: 26.04.2024

ECLASS-11.1	27371013
ECLASS-12.0	27371013
ETIM-5.0	EC002498
customs tariff number	85363010
GTIN	4048879017275
Pakke-enhed	1
Compatibility | Compatible with	
Appropriate contactors	universal
Electrical data	
Damping factor	1.5× UN
Holding power max.	146 W
Electrical data | Input	
Input voltage AC min.	0 V
Input voltage AC max.	53 V
Input voltage DC min.	0 V
Input voltage DC max.	53 V
Installation | Connection	
Connection information	Plug contact
Device protection | Media	
Flame resistance	flame retardant
Mechanical data | Material data	
Combustibility class housing (UL94)	V-0
Material housing	Plastic
Mechanical data | Mounting data	
Height	30 mm
Width	20 mm
Depth	13 mm
Environmental characteristics | Climatic	
Operating temperature min.	-20 °C
Operating temperature max.	70 °C

Oplysningerne i dette datablad er udarbejdet med størst mulig omhu.
Liability for the correctness completeness and topicality of the information is restricted to gross negligence. Version: 26.04.2024