stay connected

MUIW ANALOG COUPLER COMPONENT

IN: 0..10 V - OUT: 0..20 mA

INPUT: 0...10 V DC
OUTPUT: 0...20 mA
Screw terminals
Input and output galvanically separated
The Murrelektronik analog converters convert standard signal formats (0...10 V, 0...20 mA, 4...20 mA) galvanically separated into one of these signal formats. Due to an integrated current limiter the output is short-circuit and overload protected. Module MIIW – 0/4...20 mA to 0/4...20 mA – without auxiliary supply

Link til artikel

Billede

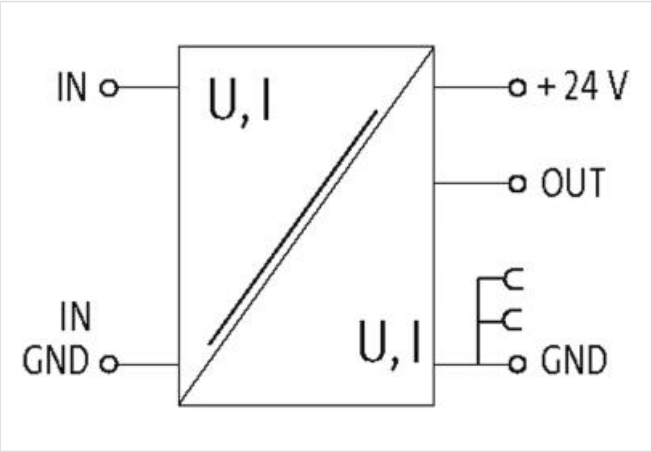

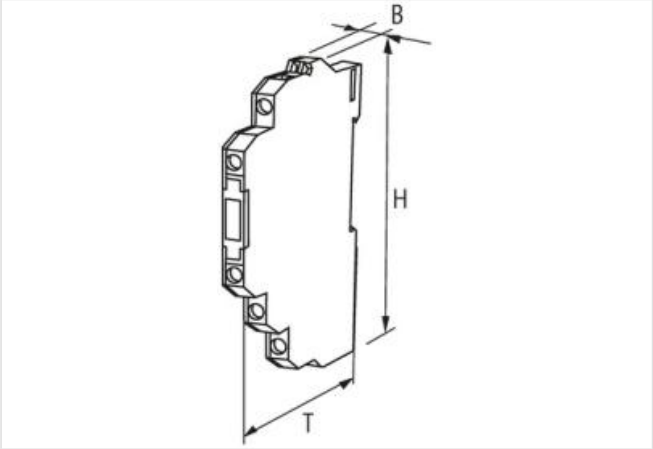

Produktet kan afvige fra billedet

Commercial data

ECLASS-6.0	27210990
ECLASS-6.1	27210990
ECLASS-7.0	27210990

Oplysningerne i dette datablad er udarbejdet med størst mulig omhu.
Liability for the correctness completeness and topicality of the information is restricted to gross negligence. Version: 25.04.2024

ECLASS-8.0	27210990
ECLASS-9.0	27210990
ECLASS-10.1	27210990
ECLASS-11.1	27210990
ECLASS-12.0	27210990
ETIM-5.0	EC002477
customs tariff number	85437090
GTIN	4048879028400
Pakke-enhed	1
Electrical data	
Accuracy (of full scale)	0,5 %
Electrical data | Supply	
Operating voltage DC	24 V
Operating voltage DC min.	19,2 V
Operating voltage DC max.	28,8 V
Operating current min.	50 mA
Operating current max.	70 mA
Electrical data | Input	
Input resistor	250 kΩ
Electrical data | Output	
Output current max.	0,025 A
Working resistance max.	500 Ω
Industrial communication	
Transmission frequency max.	500 Hz
Device protection | Electrical	
Rated surge voltage	1,5 kV
Mechanical data | Mounting data	
Mounting method	geschnappt
Suitable for mounting type	mounting rail, (EN 60715)
Height	91 mm
Width	6,2 mm
Depth	71 mm
Environmental characteristics | Climatic	
Operating temperature min.	0 °C
Operating temperature max.	60 °C
Connection type 5	
Connection	Screw terminals SK
Family construction form	terminal
Gender	female
No. of poles	1
PIN 1	GD 1
Connection	Screw terminals SK
Family construction form	terminal
Gender	female
No. of poles	1
PIN 1	In
Connection	Screw terminals SK
Family construction form	terminal
Gender	female
No. of poles	1
PIN 1	+ 24 V DC

Oplysningerne i dette datablad er udarbejdet med størst mulig omhu.
Liability for the correctness completeness and topicality of the information is restricted to gross negligence. Version: 25.04.2024

Connection	Screw terminals SK
Family construction form	terminal
Gender	female
No. of poles	1
PIN 1	Out
Connection	Screw terminals SK
Family construction form	terminal
Gender	female
No. of poles	1
PIN 1	GD

Oplysningerne i dette datablad er udarbejdet med størst mulig omhu.
Liability for the correctness completeness and topicality of the information is restricted to gross negligence. Version: 25.04.2024