MVK Fusion

MVK PN FDI6/3 FDO2/1 DIO4 IOL2 IRT PP

Double safety output port
safe inputs/outputs up to cat.4/PLe (EN ISO 13849-1), up to SIL3 (IEC 61508), up to SILCL3 (IEC 62061)
FDI6/3 FDO2/1 DIO4 IOL2 (IRT)
Ethernet 10/100 Mbit/s; Push Pull RJ45 Data connector
Push Pull Power connector, max. 16 A
M12, 5-pole, A-coded
Galvanic isolation
Connection cables are in the online shop under "Connection Technology".
Housing fully potted.

Link til artikel

Billede

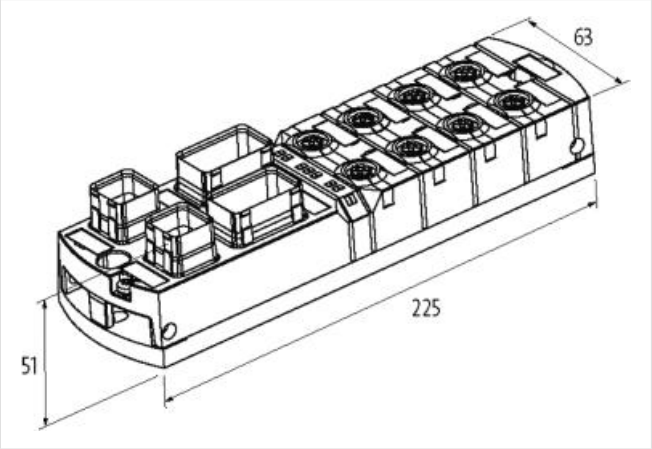

Produktet kan afvige fra billedet

Commercial data

ECLASS-6.1	27242604
ECLASS-7.0	27242604
ECLASS-8.0	27242604
ECLASS-9.0	27242604
ECLASS-10.1	27242604
ECLASS-11.1	27242604
ECLASS-12.0	27242604
customs tariff number	85389099
GTIN	4048879714983
Pakke-enhed	1

Safety codes

Service life	20 a
Category (EN ISO 13849-1)	4 (X0, X1, X2, X3); 3 (X7 PIN 3)
PFHd (IEC 61508)	7,8 E-10/h
PFHd (IEC 62061)	48 E-10/h
Performance level (EN ISO 13849-1)	e (X0, X1, X2, X3); d (X7 PIN 3)

Oplysningerne i dette datablad er udarbejdet med størst mulig omhu.
Liability for the correctness completeness and topicality of the information is restricted to gross negligence. Version: 23.04.2024

SIL (IEC 61508)	3 (X0, X1, X2, X3); 2 (X7 PIN 3)
SIL CL (IEC 62061)	3
Electrical data | Supply	
Norm operating voltage	EN 61131-2
Operating voltage US DC	24 V
Operating voltage UA DC	24 V
Total current US max.	16 A
Electrical data | Input	
Number of F inputs	6
Overload resistant	yes
Short-circuit protected	yes
Type Safety input	for electronical sensors or mechanical switches
Type input	PNP, for 3-wire sensors or mechanical switches, IO-Link Devices
Sensor current US per input max.	0,7 A
Current carrying capacity max.	0,7 A
Electrical data | Output	
Switching behavior safety output	2 FDO X3 (PIN 2, PIN 4: pp, pm, ppm switching); 1 FDO X7 (PIN 2: pp switching)
Overload resistant	yes
Short-circuit protected	yes
Output current per pin (safety) max.	2 A
Output current per pin max.	2 A
Total current output max.	8 A
Industrial communication	
Supported protocol	PROFINET
Industrial communication | Profinet	
Number of active connections (IO controller) max.	2
IRT (network communication)	yes
MRP client	yes
PROFINET Netload Class	III
PROFINET addressing	DCP
PROFINET conformance class	C
PROFINET specification	V2.3
Shared device/input	yes
Industrial communication | IO-Link	
Automatic baudrate detection	yes
IO-Link process data length output	32 Bytes
IO-Link process data length input	32 Bytes
IO-Link revision ID	V1.1.2
IO-Link type	2× Master
IO-Link transmission rate	COM1, COM2, COM3
Port Class	A, B
Diagnostics	
Actuator warning	per channel via LED and BUS
Diagnostic via BUS	per module and channel
Diagnostic via LED	per module and channel
Wire break detection	yes
IO-Link events	No voltage, Undervoltage supply
Short circuit diagnosis	yes
LED display	Ethernet connection/data traffic
Cross-link detection	Sensor/Actuator
Overload diagnosis	yes

Oplysningerne i dette datablad er udarbejdet med størst mulig omhu.
Liability for the correctness completeness and topicality of the information is restricted to gross negligence. Version: 23.04.2024

Device protection | Electrical	
Degree of protection (EN IEC 60529)	IP67
Galvanic separation (operating voltage)	yes
Mechanical data | Mounting data	
Suitable for mounting type	2-hole screw mounting
Height	51,2 mm
Width	63 mm
Depth	225 mm
Environmental characteristics | Climatic	
Operating temperature min.	-20 °C
Operating temperature max.	60 °C
Storage temperature min.	-40 °C
Storage temperature max.	85 °C
Connection type 7	
Connection type 1	X0-X2
Connection type 2	X3
Connection type 3	X4, X5
Connection type 4	X6
Connection type 5	X7
Connection type 6	XD1, XD2
Connection type 7	XF1, XF2
Family construction form	M12
Gender	female
Color contact carrier	yellow
Coding	A
No. of poles	5
PIN 1	24 V DC (US 1) Test Pulse P 4
PIN 2	FDI
PIN 3	0 V (US 1)
PIN 4	FDI
PIN 5	24 V DC (US 1) Test Pulse P 2
Family construction form	M12
Gender	female
Color contact carrier	yellow
Coding	A
No. of poles	5
PIN 1	n.c.
PIN 2	FDO
PIN 3	0 V (US 2)
PIN 4	FDO
PIN 5	n.c.
Family construction form	M12
Gender	female
Color contact carrier	black
Coding	A
No. of poles	5
PIN 1	24 V DC (US 2)
PIN 2	DI / DO
PIN 3	0 V (US 2)
PIN 4	DI / DO
PIN 5	PE
Family construction form	M12
Gender	female

Oplysningerne i dette datablad er udarbejdet med størst mulig omhu.
Liability for the correctness completeness and topicality of the information is restricted to gross negligence. Version: 23.04.2024

Color contact carrier	gray
Coding	A
No. of poles	5
PIN 1	24 V DC (US 1)
PIN 2	DI
PIN 3	0 V (US 1)
PIN 4	DI / IO-Link
PIN 5	n.c.
Family construction form	M12
Gender	female
Color contact carrier	gray
Coding	A
No. of poles	5
PIN 1	24 V DC (US 1)
PIN 2	DO (US 2)
PIN 3	0 V (US 1)
PIN 4	DI / IO-Link
PIN 5	0 V (US 2)
Family construction form	Push Pull
Gender	male
Color contact carrier	green
No. of poles	5
PIN 1	24 V DC (US 1)
PIN 2	0 V (US 1)
PIN 3	24 V DC (US 2)
PIN 4	0 V (US 2)
PIN 5	PE
Family construction form	RJ45
Gender	female
Color contact carrier	black
No. of poles	8
PIN 1	TD +
PIN 2	TD -
PIN 3	RD +
PIN 4	n.c.
PIN 5	n.c.
PIN 6	RD -
PIN 7	n.c.
PIN 8	n.c.

Oplysningerne i dette datablad er udarbejdet med størst mulig omhu.
Liability for the correctness completeness and topicality of the information is restricted to gross negligence. Version: 23.04.2024