MURR ELEKTRONIK
stay connected

MASI68 I/O MODULE

4 digital inputs, 3 digital outputs

Compact module
DI4 - 0.19 A DO3 - 0.5 A (C) - 7× M8 (AB)
Connection cables are in the online shop under "Connection Technology".
Housing fully potted.
24 V DC external (18...30.2 V DC) EN 61131-2

Link til artikel

Billede

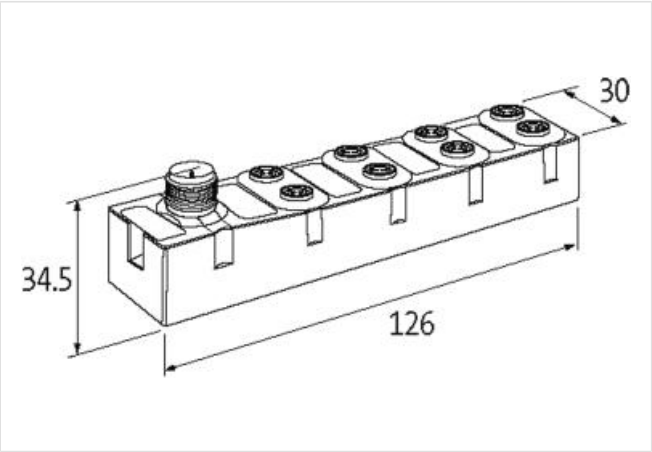

Produktet kan afvige fra billedet

Commercial data

ECLASS-6.0	27242604
ECLASS-6.1	27242604
ECLASS-7.0	27242604
ECLASS-8.0	27242604
ECLASS-9.0	27242604
ECLASS-10.1	27242604
ECLASS-11.1	27242604
ECLASS-12.0	27242604
ETIM-5.0	EC001599
customs tariff number	85176200
GTIN	4048879048965
Pakke-enhed	1

Electrical data | Supply

Bus voltage AS-Interface DC min.	26,5 V
Bus voltage AS-Interface DC max.	31,6 V
Current consumption AS-i port max.	250 mA
Total current max.	1,5 A

Electrical data | Input

Overload resistant	yes

Oplysningerne i dette datablad er udarbejdet med størst mulig omhu.
Liability for the correctness completeness and topicality of the information is restricted to gross negligence. Version: 25.04.2024

Short-circuit protected	yes
Type input	PNP, for 3-wire sensors or mechanical switches
Current carrying capacity max.	0,19 A
Electrical data | Output	
Overload resistant	yes
Short-circuit protected	yes
Output current per pin max.	0,5 A
Industrial communication | Bus data	
Address setting type	M12 connection and programming device, Master
Slave address range	(0), 1 A...31 A, 1 B...31 B
Industrial communication | AS-Interface	
Profile (IO.ID.ID2)	S-7.A.0
Diagnostics	
Diagnostic	No voltage
Diagnostic via LED	per module
LED display	Ethernet connection/data traffic
Device protection | Electrical	
Degree of protection (EN IEC 60529)	IP68
Mechanical data | Mounting data	
Mounting method	screwed
Height	126 mm
Width	30 mm
Depth	34,5 mm
Environmental characteristics | Climatic	
Operating temperature min.	-20 °C
Operating temperature max.	60 °C
Storage temperature min.	-20 °C
Storage temperature max.	70 °C
Connection type 4	
Connection type 1	B D
Connection type 2	AUX
Connection type 3	F
Connection type 4	H
Family construction form	M8
Gender	female
Color contact carrier	black
Coding	A
No. of poles	3
PIN 1	Usens +
PIN 3	Usens -
PIN 4	DI
Family construction form	M12
Gender	male
Color contact carrier	black
Coding	A
No. of poles	4
PIN 1	AS-i +
PIN 2	0 V AUX POWER
PIN 3	AS-i -
PIN 4	24 V DC AUX POWER
Family construction form	M8

Oplysningerne i dette datablad er udarbejdet med størst mulig omhu.
Liability for the correctness completeness and topicality of the information is restricted to gross negligence. Version: 25.04.2024

Gender	female
Color contact carrier	black
Coding	A
No. of poles	3
PIN 1	n.c.
PIN 3	0 V
PIN 4	DO
Family construction form	M8
Gender	female
Color contact carrier	black
Coding	A
No. of poles	3
PIN 1	n.c.
PIN 3	n.c.
PIN 4	n.c.

Oplysningerne i dette datablad er udarbejdet med størst mulig omhu.
Liability for the correctness completeness and topicality of the information is restricted to gross negligence. Version: 25.04.2024