MURR ELEKTRONIK
stay connected

M12 male 0° A-cod. with cable shielded

PUR 4x0.34 shielded gy 6m

Male straight
M12, 4-pole
A-coded
shielded
Plastic housings with good resistance against chemicals and oils.
The resistance to aggressive media should be individually tested for your application. Further details on request.
Further cable lengths on request.

Link til artikel

Billede

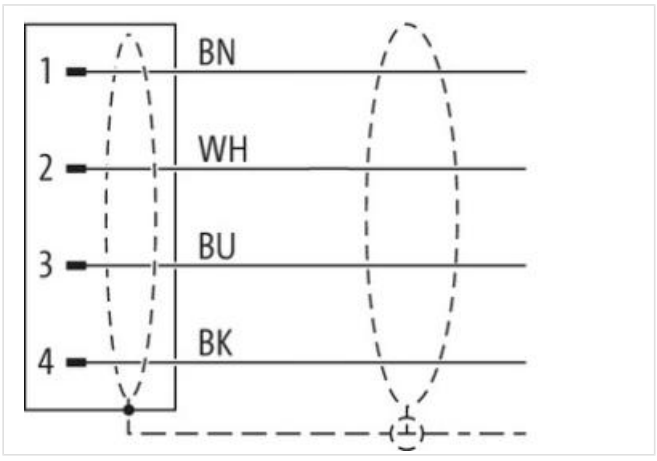

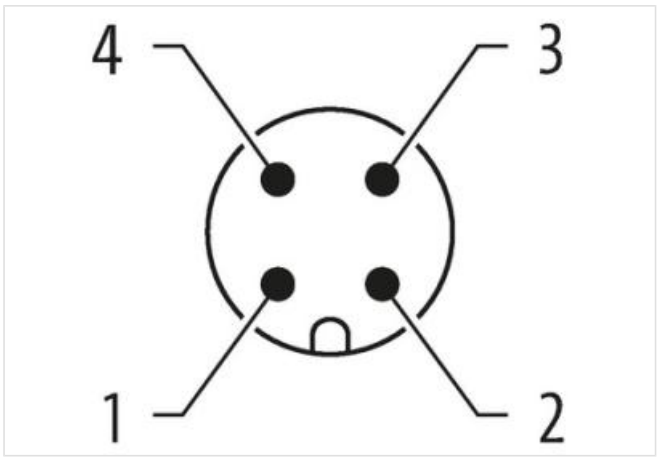

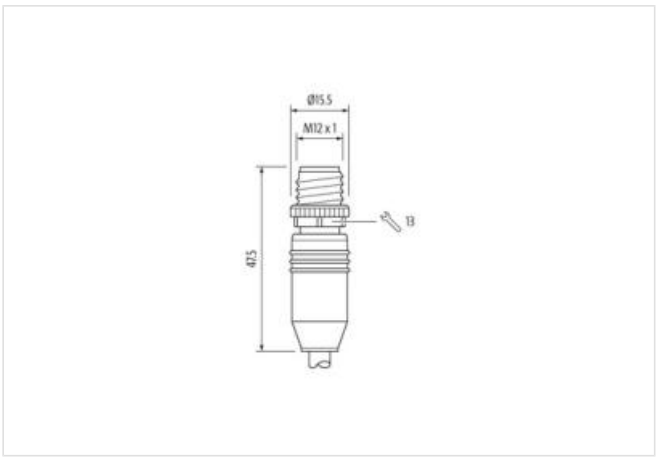

Produktet kan afvige fra billedet

Cable length	6 m

Side 1

Tightening torque	0,6 Nm

Oplysningerne i dette datablad er udarbejdet med størst mulig omhu.
Liability for the correctness completeness and topicality of the information is restricted to gross negligence. Version: 26.04.2024

MURR ELEKTRONIK
stay connected

Mounting method	inserted, screwed
Coating contact	gold plated
Family construction form	M12
Thread	M12 x 1
Coding	A
Material contact	Copper alloy
Material	PUR
No. of poles	4
Width across flats	SW13
Degree of protection (EN IEC 60529)	IP65, IP66K, IP67
Side 2	
Stripping length (jacket)	20 mm
Coating contact	gold plated
Commercial data	
ECLASS-6.0	27279218
ECLASS-6.1	27279218
ECLASS-7.0	27279218
ECLASS-8.0	27279218
ECLASS-9.0	27060311
ECLASS-10.1	27060311
ECLASS-11.1	27060311
ECLASS-12.0	27060311
ETIM-5.0	EC001855
customs tariff number	85444290
GTIN	4048879756389
Pakke-enhed	1
Electrical data | Supply	
Operating voltage AC max.	60 V
Operating voltage DC max.	60 V
Current operating per contact max.	4 A
Diagnostics	
Status indication LED	no
Installation | Connection	
Stripping length (jacket)	20 mm
Mounting set	M12 x 1
Device protection | Electrical	
Additional condition protection degree	inserted, screwed
Pollution Degree	3
Rated surge voltage	1,5 kV
Material group (IEC 60664-1)	I
Mechanical data | Material data	
Coating locking	Nickeled
Coating of fitting	nickel plated
Locking material	Zinc die-casting
Material screw connection	Zinc die-casting
Mechanical data | Mounting data	
Mounting method	inserted, screwed, Shaking protection
Environmental characteristics | Climatic	
Operating temperature min.	-25 °C
Operating temperature max.	85 °C
Additional condition temperature range	depending on cable quality

Oplysningerne i dette datablad er udarbejdet med størst mulig omhu.
Liability for the correctness completeness and topicality of the information is restricted to gross negligence. Version: 26.04.2024

MURR ELEKTRONIK
stay connected

Conformity	
Product standard	DIN EN 61076-2-101 (M12)
Installation | Cable	
Cable identification	331
Jacket Color	gray
Amount stranding	1
Stranding	4 wires twisted
Banding	Fleece, Foil
wire arrangement	brown, black, blue, white
No. of bending cycles (C-track)	0,1 Mio. @ 25 °C
Material jacket	PUR
Shore hardness jacket	85 ± 5 Shore A
Freedom from ingredients (jacket)	lead-free, cadmium-free, CFC-free, silicone-free
Outer-diameter (jacket)	5,9 mm
Tolerance outer diameter (sheath)	± 5 %
Material inner jacket	PVC
Color (inner jacket)	gray
Material wire insulation	PVC
Amount wires	4
Outer diameter insulation	1,4 mm
Outer diameter tolerance core insulation	± 5 %
Shore hardness wire insulation	85 ± 5 Shore A
Ingredient freeness wire insulation	lead-free, cadmium-free, CFC-free, silicone-free
Amount strands (wire)	42
Diameter of single wires	0,1 mm
Conductor crosssection (wire)	0,34 mm²
Material conductor wire	Stranded copper wire, bare
Conductor type (wire)	strand class 6
Traversing distance (C-track)	5 m @ 25 °C
Current load capacity (standard)	to DIN VDE 0298-4
Current load capacity min. wire	4,8 A
Electrical resistance line constant wire	57 Ω/km @ 20 °C
Max. rated voltage power (conductor - ground)	300 V
Max. rated voltage power (conductor - conductor)	350 V
AC withstand voltage power (wire - shield)	1,5 kV @ 60 s
Power frequency withstand voltage power (wire - jacket)	2 kV @ 60 s
AC withstand voltage power (wire - wire)	2 kV @ 60 s
Min. operating temperature (static)	-30 °C
Max. operating temperature (fixed)	80 °C
Operating temperature min. (dynamic)	-5 °C
Operating temperature max. (dynamic)	70 °C
Flame resistance	UL 1581 § 1100 FT2 | IEC 60332-2-2 | UL 1581 § 1090
chemical resistance	Good, application-related testing
Gasoline resistance	Good, application-related testing
Oil resistance	Good, application-related testing | DIN EN 60811-404
Bending radius (installation)	x Outer diameter
Bending radius (fixed)	10 x Outer diameter
Bending radius (dynamic)	15 x Outer diameter

Oplysningerne i dette datablad er udarbejdet med størst mulig omhu.
Liability for the correctness completeness and topicality of the information is restricted to gross negligence. Version: 26.04.2024