MURR ELEKTRONIK
stay connected

M12 male 90° B-cod. with cable shielded

PUR 1x2xAWG23 shielded vt UL/CSA+robot 5m

PROFIBUS
Male 90°
M12, 2-pole
B-coded
shielded
Plastic housings with good resistance against chemicals and oils.
The resistance to aggressive media should be individually tested for your application. Further details on request.
Further cable lengths on request.

Link til artikel

Billede

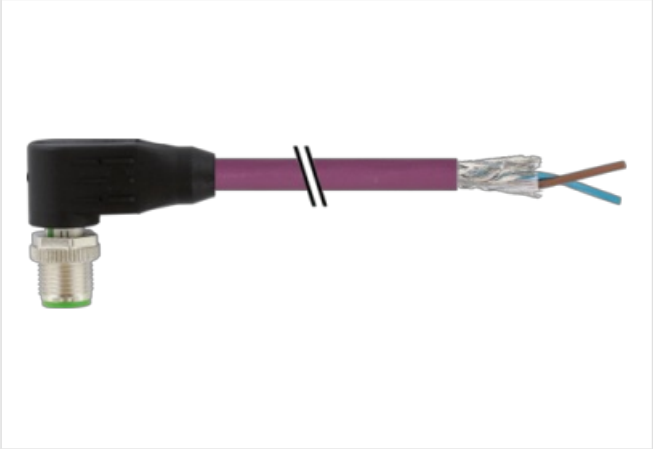

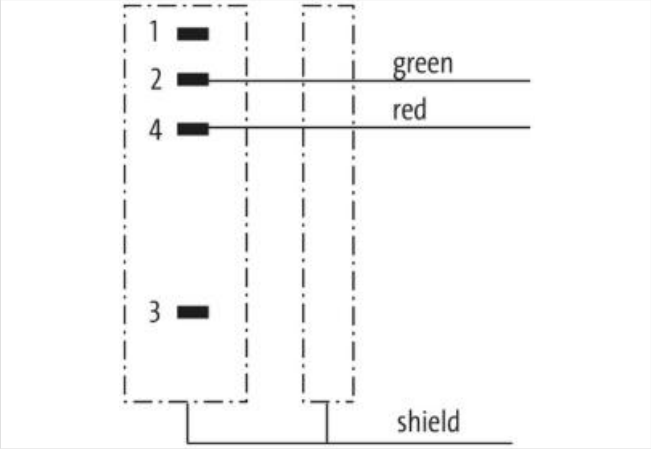

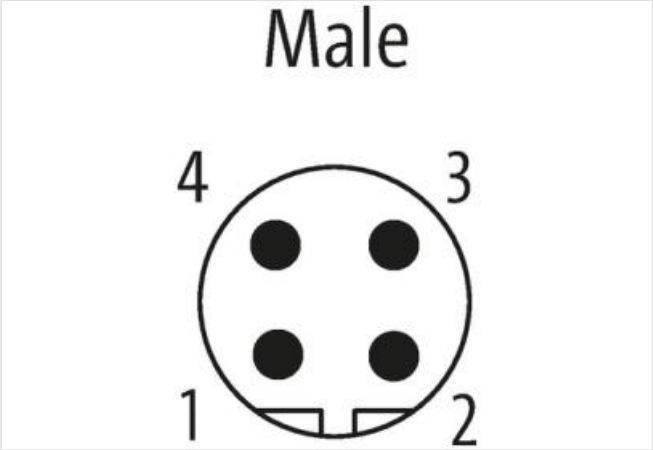

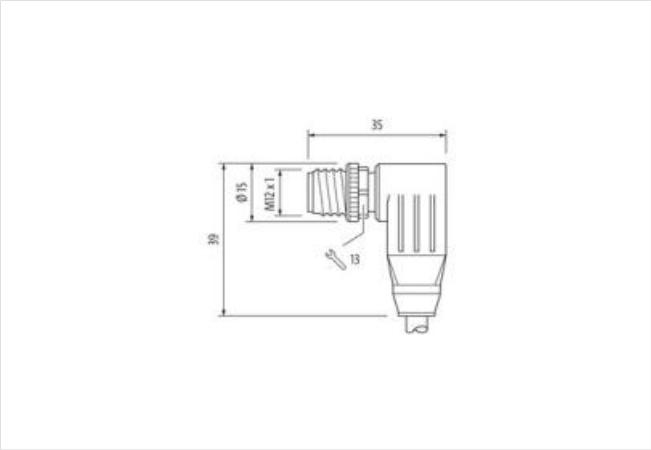

Produktet kan afvige fra billedet

Cable length	5 m

Side 1

Oplysningerne i dette datablad er udarbejdet med størst mulig omhu.
Liability for the correctness completeness and topicality of the information is restricted to gross negligence. Version: 25.04.2024

Tightening torque	0,6 Nm
Mounting method	inserted, screwed
Family construction form	M12
Thread	M12 x 1
Material	PUR
Width across flats	SW13
Degree of protection (EN IEC 60529)	IP65, IP66K, IP67
Commercial data	
ECLASS-6.0	27061801
ECLASS-6.1	27060307
ECLASS-7.0	27060307
ECLASS-8.0	27060307
ECLASS-9.0	27060307
ECLASS-10.1	27060307
ECLASS-11.1	27060307
ECLASS-12.0	27060307
ETIM-5.0	EC001855
customs tariff number	85444290
GTIN	4048879532501
Pakke-enhed	1
Electrical data | Supply	
Operating voltage AC max.	60 V
Operating voltage DC max.	60 V
Operating voltage AC (UL-listed)	30 V
Operating voltage DC (UL-listed)	30 V
Current operating per contact max.	4 A
Installation | Connection	
Mounting set	M12 x 1
Device protection | Electrical	
Additional condition protection degree	inserted, screwed
Mechanical data | Material data	
Coating locking	Nickeled
Coating of fitting	nickel plated
Locking material	Zinc die-casting
Material screw connection	Zinc die-casting
Mechanical data | Mounting data	
Mounting method	inserted, screwed, Shaking protection
Environmental characteristics | Climatic	
Operating temperature min.	-25 °C
Operating temperature max.	85 °C
Additional condition temperature range	depending on cable quality
Installation | Cable	
Cable identification	843
Jacket Color	green
Type of Certificate	cURus
Amount stranding	1
Stranding	2 wires with 2 Filler twisted
Cable shielding (type)	copper braid, tinned
Cable shielding (coverage)	85 %
Banding	Fleece, Foil
Filler	yes

Oplysningerne i dette datablad er udarbejdet med størst mulig omhu.
Liability for the correctness completeness and topicality of the information is restricted to gross negligence. Version: 25.04.2024

Drain wire (cross-section)	0,14 mm²
wire arrangement	brown, white, red, blue, pink, gray, yellow, green
No. of bending cycles (C-track)	2 Mio. @ 25 °C
Cable weigth	79,2 g/m
Material jacket	PUR
Freedom from ingredients (jacket)	lead-free, cadmium-free, CFC-free, halogen-free, silicone-free
Outer-diameter (jacket)	8,1 mm
Tolerance outer diameter (sheath)	± 5 %
Material wire insulation	PP
Amount wires	2
Outer diameter insulation	2,6 mm
Outer diameter tolerance core insulation	± 5 %
Shore hardness wire insulation	55 ± 5 Shore D
Ingredient freeness wire insulation	lead-free, cadmium-free, CFC-free, halogen-free, silicone-free
Amount strands (wire)	19
Diameter of single wires	23 AWG
Conductor crosssection (wire)	23 AWG
Drain wire (cross-section)	0,14 mm²
Material conductor wire	Stranded copper wire, bare
Traversing distance (C-track)	10 m @ 25 °C | horizontal
Current load capacity (standard)	to DIN VDE 0298-4
Current load capacity min. wire	3 A
Electrical resistance line constant wire	59,4 Ω/km
Nominal voltage power AC max.	300 V
AC withstand voltage power (wire - shield)	0,8 kV @ 60 s
AC withstand voltage power (wire - wire)	1,2 kV @ 60 s
Min. operating temperature (static)	-50 °C
Max. operating temperature (fixed)	80 °C
Operating temperature min. (dynamic)	-30 °C
Operating temperature max. (dynamic)	80 °C
Flame resistance	IEC 60332-2-2 | UL 1581 § 1100 FT2 | UL 1581 § 1090
chemical resistance	Good, application-related testing
Gasoline resistance	Good, application-related testing
Oil resistance	Good, application-related testing | DIN EN 60811-404
Bending radius (installation)	x Outer diameter
Bending radius (fixed)	5 x Outer diameter
Bending radius (dynamic)	7,5 x Outer diameter

Oplysningerne i dette datablad er udarbejdet med størst mulig omhu.
Liability for the correctness completeness and topicality of the information is restricted to gross negligence. Version: 25.04.2024