M12 male 0° D-cod. with cable shielded

PUR 1x4xAWG22 shielded gn UL/CSA+drag ch. 40m

Ethernet CAT5
Transmission properties with channel transmission up to 100 m
Male straight
Cable is approved for 600 V
M12, 4-pole
D-coded
shielded
Further cable lengths on request.
Plastic housings with good resistance against chemicals and oils.
The resistance to aggressive media should be individually tested for your application. Further details on request.

Link til artikel

Billede

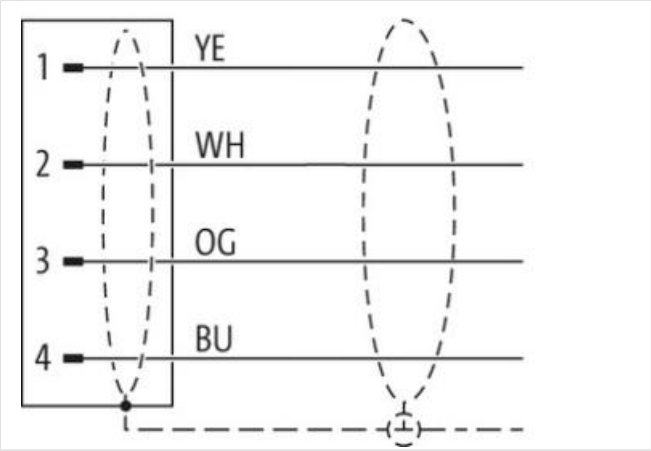

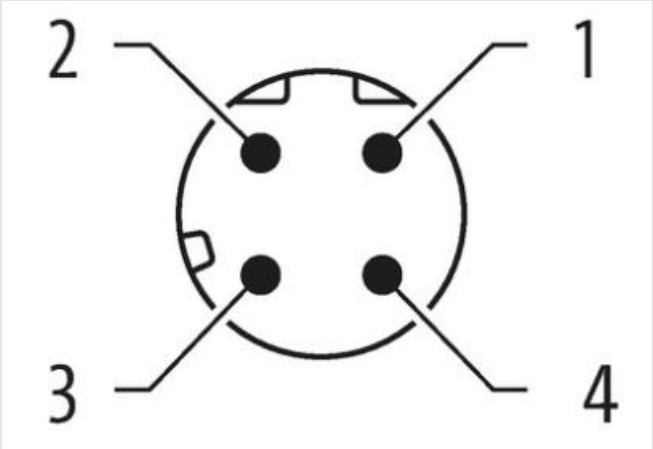

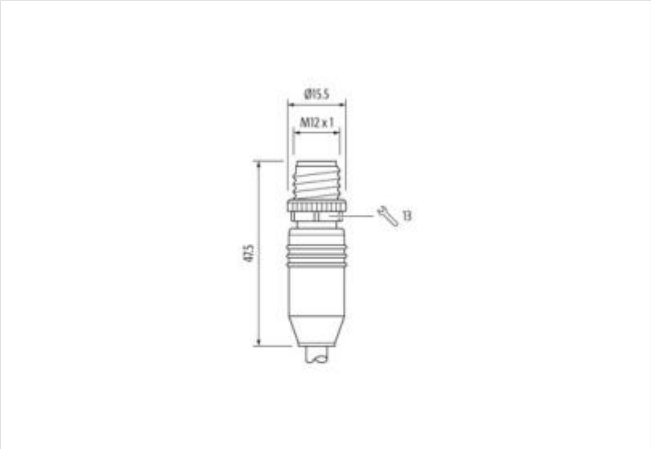

Produktet kan afvige fra billedet

Oplysningerne i dette datablad er udarbejdet med størst mulig omhu.
Liability for the correctness completeness and topicality of the information is restricted to gross negligence. Version: 20.04.2024

Cable length	40 m
Side 1	
Tightening torque	0,6 Nm
Mounting method	inserted, screwed
Family construction form	M12
Thread	M12 x 1
Coding	D
Material	PUR
Width across flats	SW13
Degree of protection (EN IEC 60529)	IP65, IP66K, IP67
Commercial data	
ECLASS-6.0	27061801
ECLASS-6.1	27060307
ECLASS-7.0	27060307
ECLASS-8.0	27060307
ECLASS-9.0	27060307
ECLASS-10.1	27060307
ECLASS-11.1	27060307
ECLASS-12.0	27060307
ETIM-5.0	EC002599
customs tariff number	85444290
GTIN	4048879662604
Pakke-enhed	1
Electrical data | Supply	
Operating voltage DC max.	60 V
Current operating per contact max.	1,5 A
Industrial communication	
Transfer parameters	CAT5, Class D (ISO/IEC 11801:2002), (EN 50173-1)
Data transmission rate max.	100 MBit/s
Industrial communication | Ethernet functionality	
duplex	Full duplex
Installation | Connection	
Mounting set	M12 x 1
Device protection | Electrical	
Additional condition protection degree	inserted, screwed
Pollution Degree	3
Rated surge voltage	1,5 kV
Material group (IEC 60664-1)	I
Mechanical data	
Contour for corrugated hose	without
Mechanical data | Material data	
Coating locking	Nickeled
Coating of fitting	nickel plated
Locking material	Zinc die-casting
Material screw connection	Zinc die-casting
Mechanical data | Mounting data	
Mounting method	inserted, screwed, Shaking protection
Environmental characteristics | Climatic	
Operating temperature min.	-25 °C

Oplysningerne i dette datablad er udarbejdet med størst mulig omhu.
Liability for the correctness completeness and topicality of the information is restricted to gross negligence. Version: 20.04.2024

Operating temperature max.	85 °C
Additional condition temperature range	depending on cable quality
Conformity	
Product standard	DIN EN 61076-2-101 (M12)
Installation | Cable	
Cable identification	659
Jacket Color	green
Type of Certificate	cURus
Amount stranding	1
Stranding	4 wires around Core filler twisted
Cable shielding (type)	copper braid, tinned
Cable shielding (coverage)	85 %
Banding	Fleece, Foil
Filler	yes
wire arrangement	white, yellow, blue, orange
No. of bending cycles (C-track)	2 Mio.
Cable weigth	89,1 g/m
Material jacket	PUR
Shore hardness jacket	90 ± Shore A
Freedom from ingredients (jacket)	lead-free, CFC-free, halogen-free
Outer-diameter (jacket)	7,4 mm
Tolerance outer diameter (sheath)	± 5 %
Material inner jacket	TPE-V
Color (inner jacket)	white
Material wire insulation	PE
Amount wires	4
Outer diameter insulation	1,4 mm
Outer diameter tolerance core insulation	± 5 %
Shore hardness wire insulation	65 Shore D
Ingredient freeness wire insulation	lead-free, CFC-free, halogen-free
Amount strands (wire)	7
Diameter of single wires	22 AWG
Conductor crosssection (wire)	22 AWG
Material conductor wire	Stranded copper wire, bare
Traversing distance (C-track)	5 m
Current load capacity (standard)	to DIN VDE 0298-4
Current load capacity min. wire	4,8 A
Characteristic impedance	100 Ω ± 15 %
Electrical resistance line constant wire	55 Ω/km @ 20 °C
Loop resistance	5000 MΩ × km
Nominal voltage power AC max.	60 V
Electrical capacity line constant (wire - wire) (power)	50000 pF/km
AC withstand voltage power (wire - shield)	2 kV @ 60 s
Power frequency withstand voltage power (wire - jacket)	2 kV @ 60 s
AC withstand voltage power (wire - wire)	2 kV @ 60 s
Min. operating temperature (static)	-40 °C
Max. operating temperature (fixed)	80 °C
Operating temperature min. (dynamic)	-30 °C
Operating temperature max. (dynamic)	70 °C
Flame resistance	UL 1581 § 1100 FT2 | IEC 60332-2-2 | UL 1581 § 1090
chemical resistance	Good, application-related testing

Oplysningerne i dette datablad er udarbejdet med størst mulig omhu.
Liability for the correctness completeness and topicality of the information is restricted to gross negligence. Version: 20.04.2024

Gasoline resistance	Good, application-related testing
Oil resistance	DIN EN 60811-404 | Good, application-related testing
Bending radius (fixed)	5 x Outer diameter
Bending radius (dynamic)	12 x Outer diameter

Oplysningerne i dette datablad er udarbejdet med størst mulig omhu.
Liability for the correctness completeness and topicality of the information is restricted to gross negligence. Version: 20.04.2024