M8 male 0° / M8 female 90° A-cod.

PUR 3x0.25 ye UL/CSA+robot+drag ch. 1m

Male straight – female 90°
Zinc die casting, save-cover coated
M8 – M8, 3-pole
Art-No. 7005 - M8 Lite - (plastic hexagonal screw) on request
Further cable lengths on request.
Plastic housings with good resistance against chemicals and oils.
The resistance to aggressive media should be individually tested for your application. Further details on request.

Link til artikel

Billede

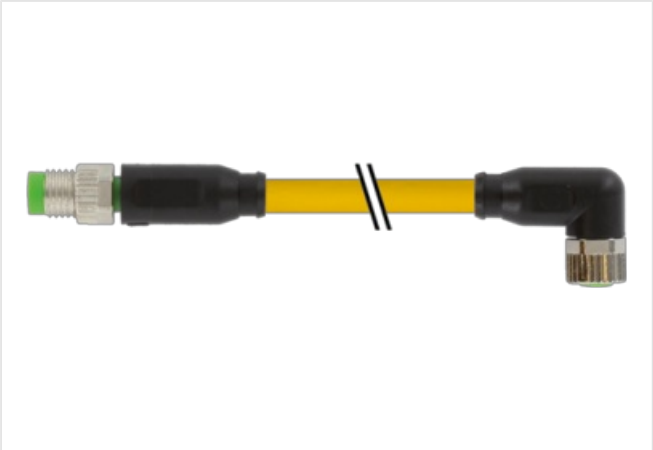

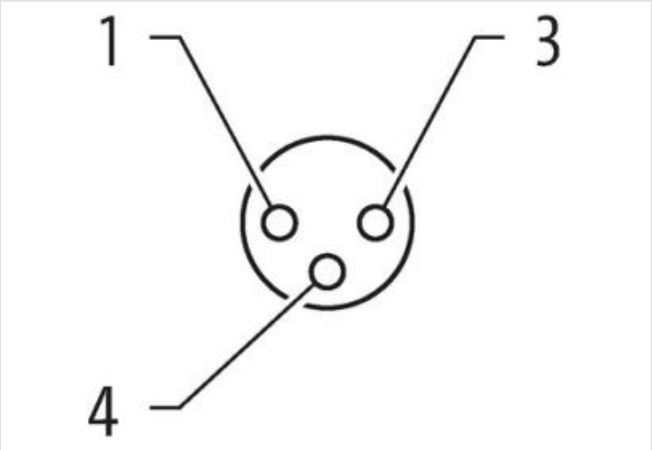

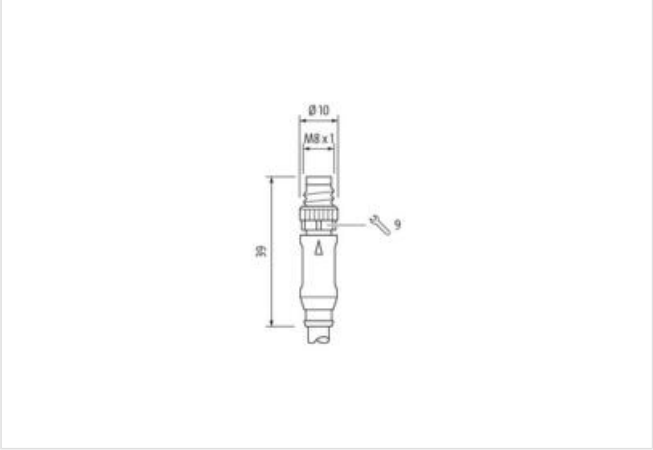

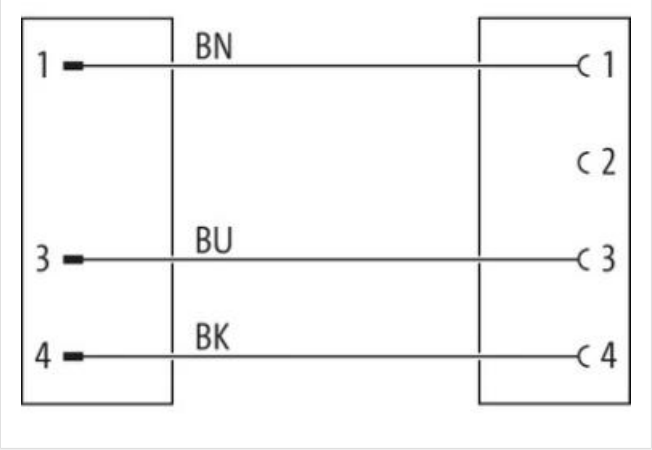

Oplysningerne i dette datablad er udarbejdet med størst mulig omhu.
Liability for the correctness completeness and topicality of the information is restricted to gross negligence. Version: 19.05.2024

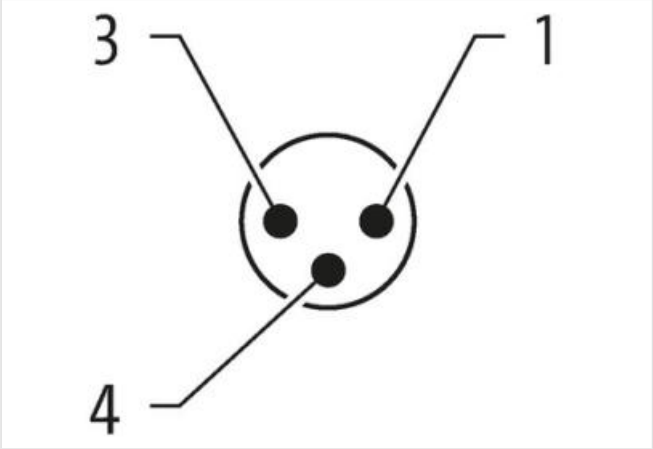

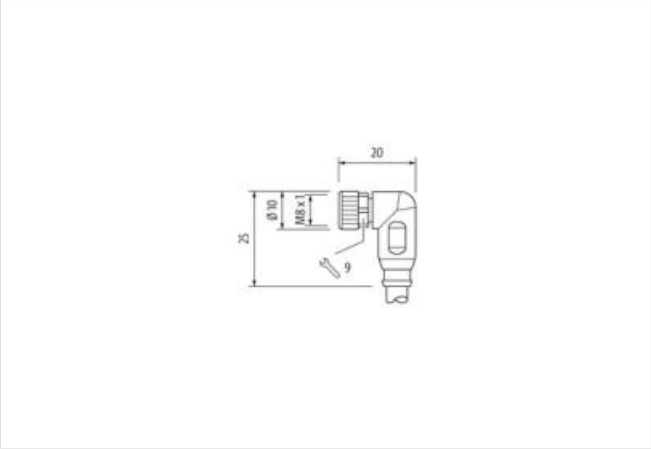

Produktet kan afvige fra billedet

Cable length	1 m
Side 1	
Tightening torque	0,4 Nm
Mounting method	inserted, screwed
Coating contact	gold plated
Family construction form	M8
Thread	M8 x 1
suitable for corrugated tube (internal Ø)	6,5 mm
Material contact	Copper alloy
No. of poles	3
Width across flats	SW9
Side 2	
Tightening torque	0,4 Nm
Mounting method	inserted, screwed
Coating contact	gold plated
Family construction form	M8
Thread	M8 x 1
Material contact	Copper alloy
No. of poles	3
Commercial data	
ECLASS-6.0	27279218
ECLASS-6.1	27279218
ECLASS-7.0	27279218
ECLASS-8.0	27279218
ECLASS-9.0	27060311
ECLASS-10.1	27060311
ECLASS-11.1	27060311
ECLASS-12.0	27060311
ETIM-5.0	EC001855
customs tariff number	85444290
GTIN	4048879129299
Pakke-enhed	1
Electrical data | Supply	

Oplysningerne i dette datablad er udarbejdet med størst mulig omhu.
Liability for the correctness completeness and topicality of the information is restricted to gross negligence. Version: 19.05.2024

Operating voltage AC max.	50 V
Operating voltage DC max.	60 V
Operating voltage AC (UL-listed)	30 V
Operating voltage DC (UL-listed)	30 V
Current operating per contact max.	4 A
Diagnostics	
Status indication LED	no
Device protection | Electrical	
Degree of protection (EN IEC 60529)	IP65, IP67, IP68, IP66K
Additional condition protection degree	inserted, screwed
Pollution Degree	3
Rated surge voltage	1,5 kV
Material group (IEC 60664-1)	I
Mechanical data | Material data	
Coating locking	safe-cover coated
Material gasket	FKM
Material housing	PUR
Locking material	Zinc die-casting
Mechanical data | Mounting data	
Mounting method	inserted, screwed, Shaking protection
Environmental characteristics | Climatic	
Operating temperature min.	-25 °C
Operating temperature max.	85 °C
Additional condition temperature range	depending on cable quality
Important installation notes	
Note on strain relief	Protect the connectors by suitable measures from mechanical loads, e.g. by the usage of cable ties.
Note on bending radius	**Attention:** Observe the permissible bending radii when laying cables, as the IP protection class can be endangered by excessive bending forces.
Conformity	
Product standard	DIN EN 61076-2-114 (M8)
Installation | Cable	
Cable identification	050
Cable Type	5
Jacket Color	yellow
Type of Certificate	cURus
Amount stranding	1
Stranding	3 wires twisted
wire arrangement	brown, black, blue
Cable weigth	26,4 g/m
Material jacket	PUR
Shore hardness jacket	58 ± 3 Shore D
Freedom from ingredients (jacket)	lead-free, cadmium-free, CFC-free, halogen-free, silicone-free
Outer-diameter (jacket)	4,3 mm
Tolerance outer diameter (sheath)	± 5 %
Material wire insulation	PP
Amount wires	3
Outer diameter insulation	1,25 mm
Outer diameter tolerance core insulation	± 5 %
Shore hardness wire insulation	74 ± 3 Shore D
Ingredient freeness wire insulation	lead-free, cadmium-free, CFC-free, halogen-free, silicone-free
Amount strands (wire)	32

Oplysningerne i dette datablad er udarbejdet med størst mulig omhu.
Liability for the correctness completeness and topicality of the information is restricted to gross negligence. Version: 19.05.2024

Diameter of single wires	0,1 mm
Conductor crosssection (wire)	0,25 mm²
Material conductor wire	Stranded copper wire, bare
Conductor type (wire)	strand class 6
Traversing distance (C-track)	5 m @ 25 °C | horizontal
Nominal voltage AC max.	300 V
Current load capacity (standard)	to DIN VDE 0298-4
Current load capacity min. wire	4,5 A
Electrical resistance line constant wire	79 Ω/km @ 20 °C
AC withstand voltage (wire - wire)	2,5 kV @ 60 s
Power frequency withstand voltage (wire - jacket)	2,5 kV @ 60 s
Min. operating temperature (static)	-40 °C
Max. operating temperature (fixed)	80 °C / 90 °C @ 10000 h Operation
Operating temperature min. (dynamic)	-25 °C
Operating temperature max. (dynamic)	80 °C / 90 °C @ 10000 h Operation
Flame resistance	UL 1581 § 1090 | UL 1581 § 1100 FT2 | IEC 60332-2-2
chemical resistance	Good, application-related testing
Gasoline resistance	Good, application-related testing
Oil resistance	DIN EN 60811-404 | Good, application-related testing
Bending radius (fixed)	5 x Outer diameter
Bending radius (dynamic)	10 x Outer diameter
Travel speed (C-track)	10 Mio. @ 25 °C
No. of torsion cycles	1 Mio.
Torsion stress	± 360 °/m
Torsion speed	35 cycles/min

Oplysningerne i dette datablad er udarbejdet med størst mulig omhu.
Liability for the correctness completeness and topicality of the information is restricted to gross negligence. Version: 19.05.2024