M8 male 0° / M8 female 0° A-cod. shielded

PUR 4x0.34 shielded bk UL/CSA+drag ch. 6m

Male straight – female straight
M8 – M8, 4-pole
shielded
Plastic housings with good resistance against chemicals and oils.
The resistance to aggressive media should be individually tested for your application. Further details on request.
Further cable lengths on request.

Link til artikel

Billede

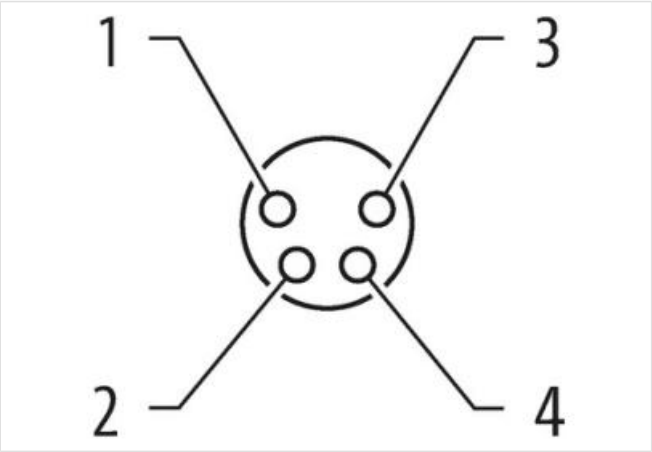

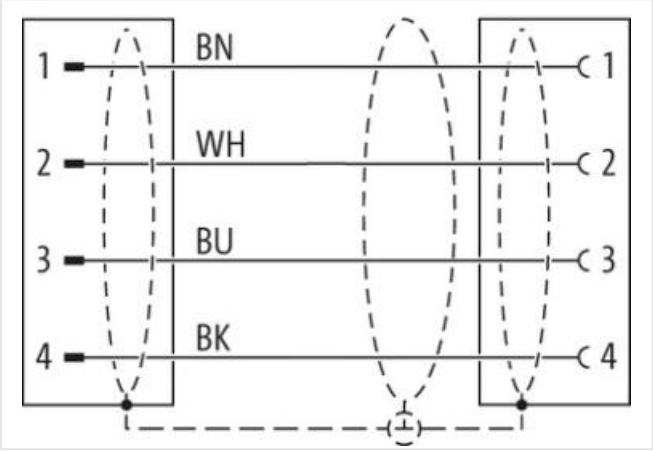

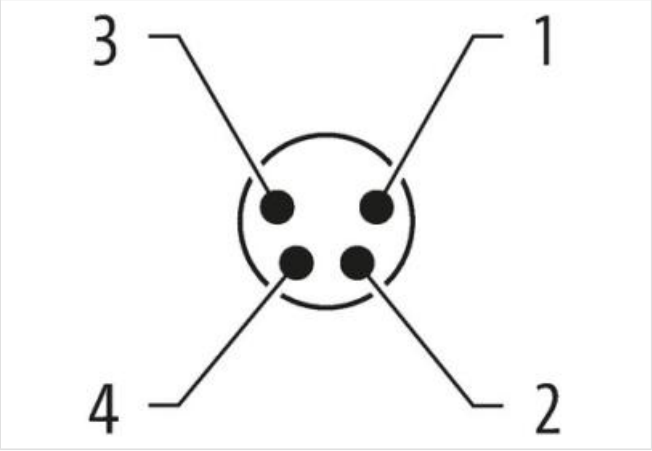

Oplysningerne i dette datablad er udarbejdet med størst mulig omhu.
Liability for the correctness completeness and topicality of the information is restricted to gross negligence. Version: 26.04.2024

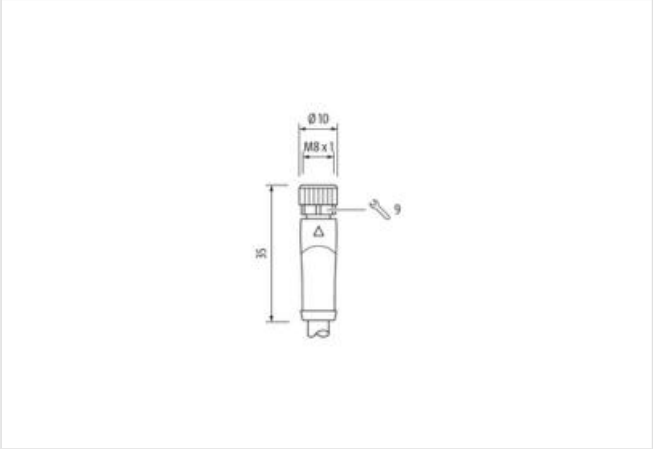

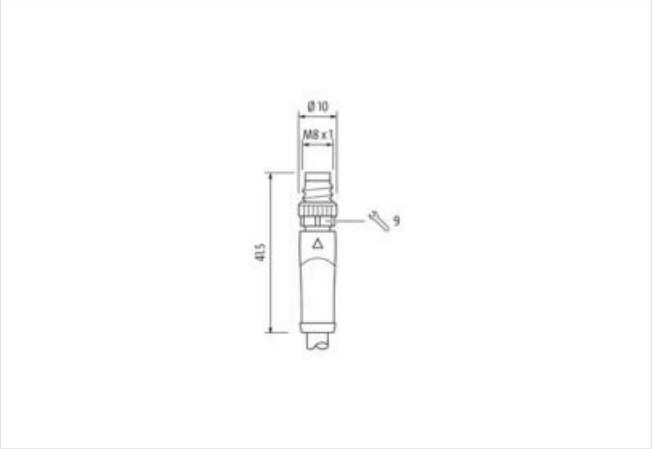

Produktet kan afvige fra billedet

Cable length	6 m
Side 1	
Tightening torque	0,4 Nm
Family construction form	M8
Thread	M8 x 1
suitable for corrugated tube (internal Ø)	8,5 mm
No. of poles	4
Width across flats	SW9
Side 2	
Tightening torque	0,4 Nm
Family construction form	M8
Thread	M8 x 1
No. of poles	4
Commercial data	
ECLASS-6.0	27279218
ECLASS-6.1	27279218
ECLASS-7.0	27279218
ECLASS-8.0	27279218
ECLASS-9.0	27060311
ECLASS-10.1	27060311
ECLASS-11.1	27060311
ECLASS-12.0	27060311
ETIM-5.0	EC001855
customs tariff number	85444290
GTIN	4048879615235
Pakke-enhed	1
Electrical data | Supply	
Operating voltage AC max.	50 V
Operating voltage DC max.	60 V
Operating voltage AC (UL-listed)	30 V
Operating voltage DC (UL-listed)	30 V
Current operating per contact max.	4 A

Oplysningerne i dette datablad er udarbejdet med størst mulig omhu.
Liability for the correctness completeness and topicality of the information is restricted to gross negligence. Version: 26.04.2024

MURR ELEKTRONIK
stay connected

Device protection | Electrical	
Degree of protection (EN IEC 60529)	IP65, IP67, IP68, IP66K
Additional condition protection degree	inserted, screwed
Pollution Degree	3
Rated surge voltage	1,5 kV
Material group (IEC 60664-1)	I
Mechanical data | Material data	
Coating locking nut	nickel plated
Locking screw coating	nickel plated
Material gasket	FKM
Material housing	PUR
Locking nut material	Zinc die-casting
Locking material screw	Brass
Mechanical data | Mounting data	
Mounting method	inserted, screwed, Shaking protection
Environmental characteristics | Climatic	
Operating temperature min.	-25 °C
Operating temperature max.	85 °C
Additional condition temperature range	depending on cable quality
Conformity	
Product standard	DIN EN 61076-2-114 (M8)
Installation | Cable	
Cable identification	641
Cable Type	3
Jacket Color	black
Type of Certificate	cURus
Amount stranding	1
Stranding	4 wires twisted
Cable shielding (type)	copper braid, tinned
Cable shielding (coverage)	80 %
Banding	Fleece, Foil
wire arrangement	brown, black, blue, white
No. of bending cycles (C-track)	5 Mio. @ 25 °C
Cable weigth	50,6 g/m
Material jacket	PUR
Shore hardness jacket	90 ± 5 Shore A
Freedom from ingredients (jacket)	lead-free, cadmium-free, CFC-free, halogen-free, silicone-free
Outer-diameter (jacket)	5,3 mm
Tolerance outer diameter (sheath)	± 5 %
Material wire insulation	PP
Amount wires	4
Outer diameter insulation	1,25 mm
Outer diameter tolerance core insulation	± 5 %
Shore hardness wire insulation	70 ± 5 Shore D
Ingredient freeness wire insulation	lead-free, cadmium-free, CFC-free, halogen-free, silicone-free
Amount strands (wire)	42
Diameter of single wires	0,1 mm
Conductor crosssection (wire)	0,34 mm²
Material conductor wire	Stranded copper wire, bare
Conductor type (wire)	strand class 6
Traversing distance (C-track)	5 m @ 25 °C | horizontal
Current load capacity (standard)	to DIN VDE 0298-4

Oplysningerne i dette datablad er udarbejdet med størst mulig omhu.
Liability for the correctness completeness and topicality of the information is restricted to gross negligence. Version: 26.04.2024

Current load capacity min. wire	4,8 A
Electrical resistance line constant wire	57 Ω/km @ 20 °C
Nominal voltage power AC max.	300 V
AC withstand voltage power (wire - shield)	2 kV @ 60 s
Power frequency withstand voltage power (wire - jacket)	2 kV @ 60 s
AC withstand voltage power (wire - wire)	2 kV @ 60 s
Min. operating temperature (static)	-40 °C
Max. operating temperature (fixed)	80 °C / 90 °C @ 10000 h Operation
Operating temperature min. (dynamic)	-25 °C
Operating temperature max. (dynamic)	80 °C / 90 °C @ 10000 h Operation
UV resistance	DIN EN ISO 4892-2 A
Flame resistance	IEC 60332-2-2 | UL 1581 § 1090 | UL 1581 § 1100 FT2
chemical resistance	Good, application-related testing
Gasoline resistance	Good, application-related testing
Oil resistance	DIN EN 60811-404 | Good, application-related testing
Bending radius (fixed)	5 x Outer diameter
Bending radius (dynamic)	10 x Outer diameter
No. of torsion cycles	2 Mio.
Torsion speed	35 cycles/min
Torsion stress	± 30 °/m

Oplysningerne i dette datablad er udarbejdet med størst mulig omhu.
Liability for the correctness completeness and topicality of the information is restricted to gross negligence. Version: 26.04.2024