MURR ELEKTRONIK
stay connected

EXACT12, 8XM12, 5-POLE, MOULDED CABLE

10.0m PUR 16x0,5+3x1,0, UL/CSA

8-way, 5-pole
10.0 m
Further cable lengths on request.
Plastic housings with good resistance against chemicals and oils.
The resistance to aggressive media should be individually tested for your application. Further details on request.

Link til artikel

Billede

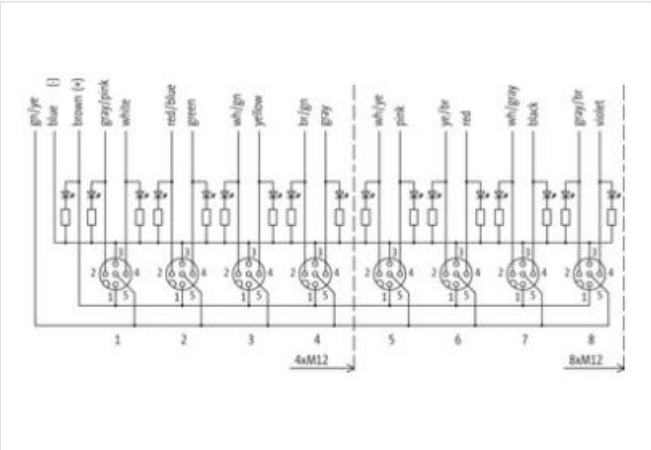

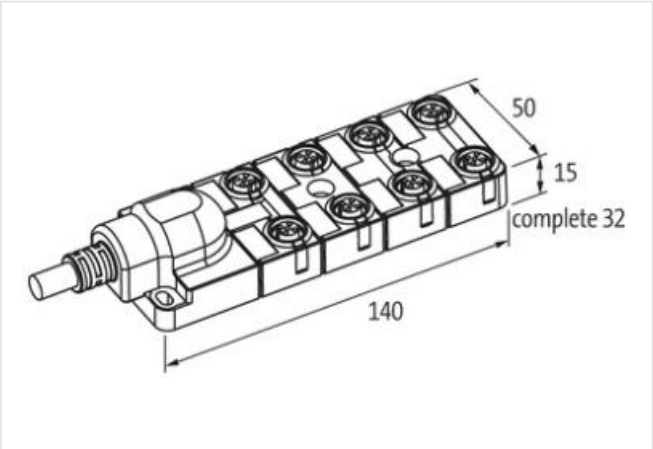

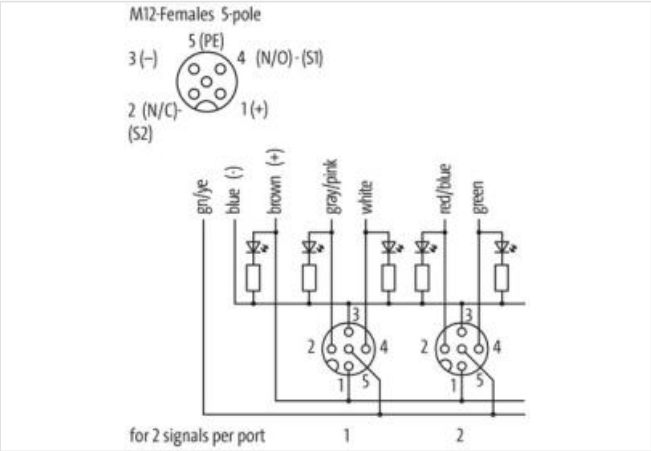

Produktet kan afvige fra billedet

Commercial data

ECLASS-6.0	27143423
ECLASS-6.1	27279219
ECLASS-7.0	27279219
ECLASS-8.0	27279219
ECLASS-9.0	27440108

Oplysningerne i dette datablad er udarbejdet med størst mulig omhu.
Liability for the correctness completeness and topicality of the information is restricted to gross negligence. Version: 28.04.2024

ECLASS-10.1	27440108
ECLASS-11.1	27440108
ECLASS-12.0	27440108
ETIM-5.0	EC002585
customs tariff number	85444290
GTIN	4048879053976
Pakke-enhed	1
Electrical data | Supply	
Operating voltage DC	24 V
Current operating per contact max.	4 A
Installation | Connection	
Mounting set	M12 x 1
Device protection | Electrical	
Degree of protection (EN IEC 60529)	IP65, IP67
Device protection | Media	
Flame resistance	flame retardant
Mechanical data | Material data	
Material housing	Plastic
Mechanical data | Mounting data	
Mounting method	Schraubgewinde
Environmental characteristics | Climatic	
Operating temperature min.	-20 °C
Operating temperature max.	70 °C
Additional condition temperature range	depending on cable quality
Installation | Cable	
Cable identification	452
Jacket Color	gray
Type of Certificate	cURus
Amount stranding	1
Stranding	7 wires around Core filler twisted
Amount stranding (type 2)	1
Stranding (type 2)	12 wires counter-rotating twisted
Banding	Fleece
Filler	yes
wire arrangement	gray-pink, brown-green, yellow, green-white, green, red-blue, white, (brown-gray, black, gray-white, red, brown-yellow, pink, yellow-white, gray, blue, brown, green-yellow, violet)
Cable weigth	231 g/m
Material jacket	PUR
Shore hardness jacket	94 ± 5 Shore A
Freedom from ingredients (jacket)	lead-free, cadmium-free, CFC-free, halogen-free
Outer-diameter (jacket)	11,5 mm
Tolerance outer diameter (sheath)	± 5 %
Material wire insulation	TPE-E
Amount wires	16
Outer diameter insulation	1,6 mm
Outer diameter tolerance core insulation	± 5 %
Shore hardness wire insulation	55 ± 5 Shore D
Ingredient freeness wire insulation	lead-free, CFC-free, halogen-free, silicone-free, LABS-free
Amount strands (wire)	64
Diameter of single wires	0,1 mm
Conductor crosssection (wire)	0,5 mm²

Oplysningerne i dette datablad er udarbejdet med størst mulig omhu.
Liability for the correctness completeness and topicality of the information is restricted to gross negligence. Version: 28.04.2024

Material conductor wire	Stranded copper wire, bare
Conductor type (wire)	strand class 6
Material wire insulation (Data)	TPE-E
Outer diameter wire insulation (Data)	2,1 mm
Tolerance outer diameter wire insulation (data)	± 5 %
Shore hardness wire insulation (Data)	55 ± 5 Shore D
Ingredient freeness wire insulation (Data)	lead-free, halogen-free, silicone-free, LABS-free
Amount wires (Data)	3
Amount strands wire (Data)	128
Diameter of single wires (Data)	0,1 mm
Conductor crosssection wire (Data)	1 mm²
Material conductor wire (Data)	Stranded copper wire, bare
Wire conductor type (Data)	strand class 6
Traversing distance (C-track)	5 m @ 25 °C
Current load capacity (standard)	to DIN VDE 0298-4
Current load capacity min. wire	5,9 A
Current load capacity min. Wire (Data)	15 A
Electrical resistance line constant wire	39 Ω/km @ 20 °C
Electrical resistance coating wire (Data)	20 Ω/km @ 20 °C
Max. rated voltage power (conductor - ground)	300 V
Max. rated voltage power (conductor - conductor)	300 V
Power frequency withstand voltage power (wire - jacket)	2 kV @ 60 s
AC withstand voltage power (wire - wire)	2 kV @ 60 s
Min. operating temperature (static)	-40 °C
Max. operating temperature (fixed)	90 °C
Operating temperature min. (dynamic)	-20 °C
Operating temperature max. (dynamic)	90 °C
Flame resistance	UL 1581 § 1100 FT2 | IEC 60332-2-2 | UL 1581 § 1090
chemical resistance	Good, application-related testing
Gasoline resistance	Good, application-related testing
Oil resistance	Good, application-related testing | DIN EN 60811-404
No. of bending cycles (C-track)	5 Mio. @ 25 °C
Bending radius (installation)	x Outer diameter
Bending radius (fixed)	8 x Outer diameter
Bending radius (dynamic)	10 x Outer diameter
Connection type 2	
Family construction form	free cable end
No. of poles	19
Family construction form	M12
Gender	female
Color contact carrier	black
Coding	A
No. of poles	5
PIN 1	+
PIN 2	NC S 2
PIN 3	-
PIN 4	NO S 1
PIN 5	PE

Oplysningerne i dette datablad er udarbejdet med størst mulig omhu.
Liability for the correctness completeness and topicality of the information is restricted to gross negligence. Version: 28.04.2024